Ultracell®

'Quality in Every Language'

UCG20-12

12V 20Ah

Solar Series

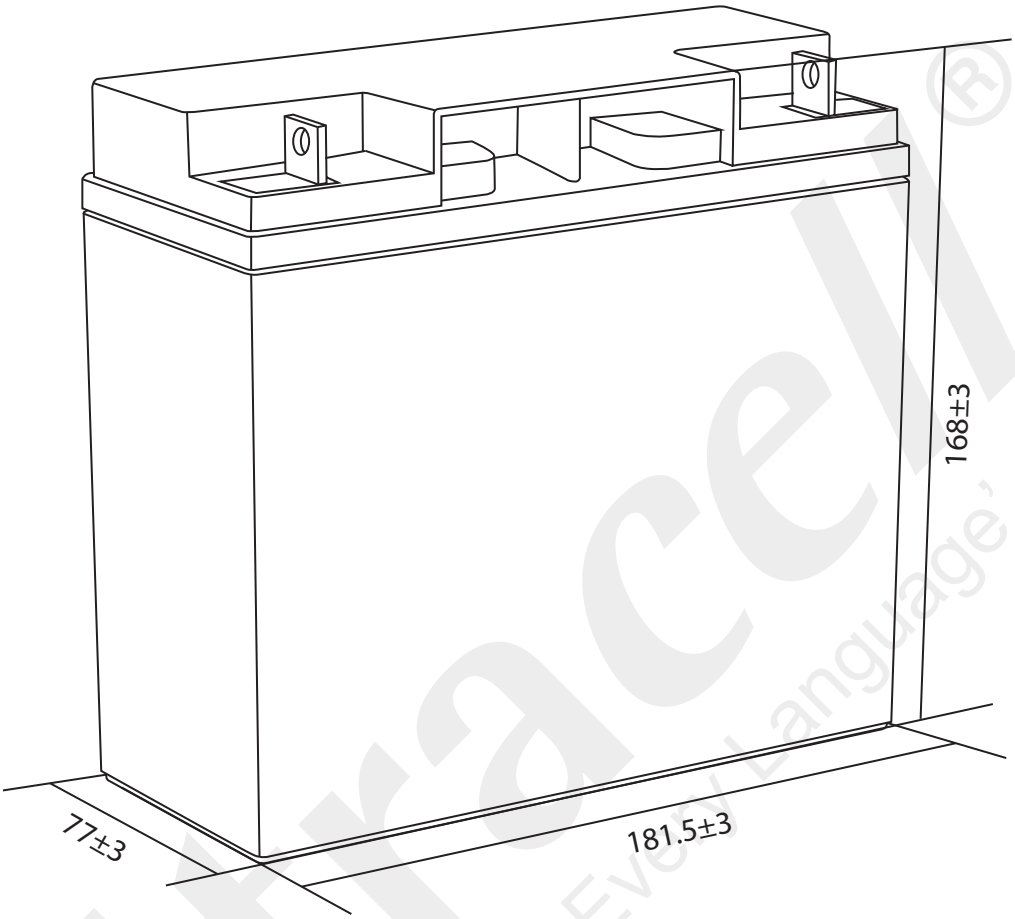

Technical Dimensions (mm)

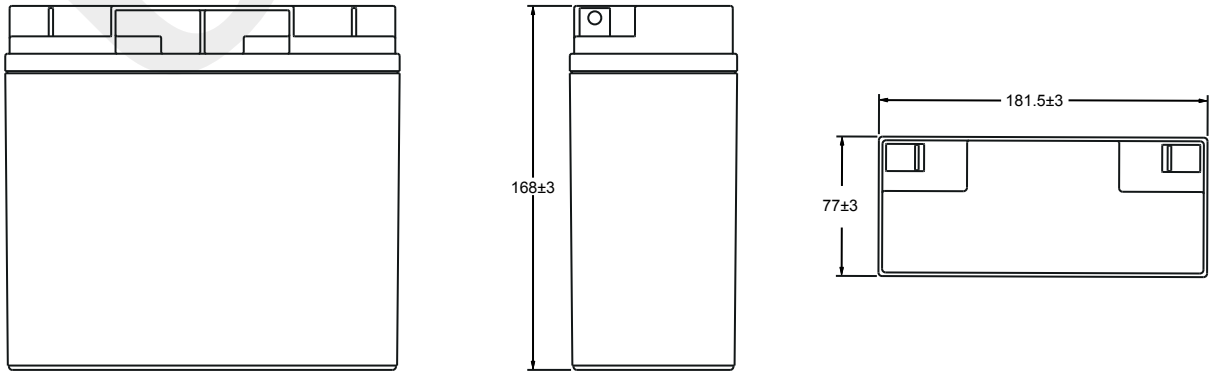

Ultracell (UK) Ltd | Vesty Business Park, Vesty Road, Liverpool, L30 1NY, United Kingdom
Tel: +44 (0) 151 523 2777 | Fax: +44 (0) 151 523 0855 | Email: info@ultracell.co.uk
www.ultracell.co.uk

UCG-V3-REV1 07/23

ALL DATA IS SUBJECT TO CHANGE WITHOUT NOTICE

Ultracell®
'Quality in Every Language'

TechData

UCG20-12
12V 20Ah
Solar Series

Image

Terminal Dimensions (mm)

Standard Terminal: F3

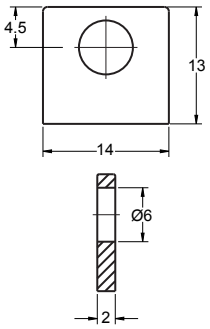

Optional Terminal: F12

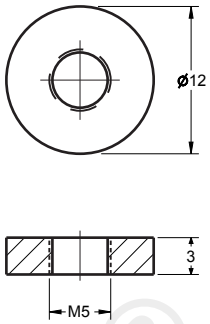

Technical Specification

Output	Nominal Voltage Nominal Capacity (20HR)	12V 20Ah
Terminal Type	Standard Terminal Optional Terminal	F3 F12
Container Material	Standard Option Flame Retardant Option (FR)	ABS ABS (UL94:VO)
Rated Capacity	(20HR 1.80V/cell, 25°C) (10HR 1.80V/cell, 25°C) (5HR 1.75V/cell, 25°C) (3HR 1.75V/cell, 25°C) (1HR 1.60V/cell, 25°C)	20 Ah/1.00A 18 Ah/1.80A 15.8 Ah/3.16A 14.3 Ah/4.77A 11.6 Ah/11.6A
Max Discharge Current	270A (5s)	
Internal Resistance	Approx 15mΩ	
Discharge Characteristics	Operating Temp Range	Discharge: -15 ~ 50°C Charge: 0 ~ 40°C Storage: -15 ~ 40°C
	Nominal Operating Temp Range	25 ± 3°C
	Cycle Use	Initial Charging Current less than 6A. Voltage 14.4V ~ 15.0V @ 25°C Temp. Coefficient -30mV/°C
	Standby Use	Initial Charging Current less than 6A. Voltage 13.5V ~ 13.8V @ 25°C Temp. Coefficient -20mV/°C
	Capacity affected by Temperature	40°C 103% 25°C 100% 0°C 86%
Design Floating Life at 20°C	10 Years	

Self Discharge

Ultracell® UCG batteries may be stored for up to 6 months at 25°C and then a refresh charge is required. For higher temperatures the time intervals will be shorter.

Constant Current Discharge / Constant Power Discharge At 25°C (Amperes & Watts/Cell)

A = Amperes W = Watts

F.V/TIME A / W	10 min	15 min	20 min	30 min	45 min	60 min	2 hours	3 hours	4 hours	5 hours	6 hours	8 hours	10 hours	20 hours
1.85V/cell	26.4 49.2	22.2 41.8	19.4 36.9	13.9 26.8	11.1 21.4	8.99 17.4	5.58 10.9	4.35 8.50	3.53 6.90	2.87 5.63	2.50 4.94	2.04 4.04	1.70 3.37	0.98 1.91
1.80V/cell	33.7 62.0	26.8 49.8	22.9 43.0	16.5 31.2	12.9 24.7	10.1 19.4	6.09 11.8	4.68 9.11	3.77 7.34	3.08 6.02	2.68 5.28	2.16 4.27	1.80 3.56	1.00 1.93
1.75V/cell	37.0 67.3	29.3 53.8	24.6 45.9	17.1 32.3	13.4 25.5	10.5 20.2	6.32 12.2	4.77 9.25	3.85 7.48	3.16 6.17	2.75 5.41	2.20 4.34	1.82 3.60	1.20 1.94
1.70V/cell	40.3 72.3	31.2 57.1	25.9 47.9	17.8 33.5	13.9 26.5	10.9 20.8	6.57 12.7	4.90 9.49	3.95 7.67	3.24 6.31	2.81 5.52	2.23 4.40	1.84 3.63	1.24 1.98
1.65V/cell	43.5 77.5	33.2 60.3	27.5 50.7	18.8 35.1	14.2 27.0	11.2 21.5	6.75 13.0	5.11 9.86	4.09 7.91	3.33 6.48	2.87 5.63	2.27 4.47	1.87 3.70	1.45 2.00
1.60V/cell	47.3 82.7	35.5 63.7	29.3 53.4	19.8 36.7	14.9 27.9	11.6 22.0	6.98 13.3	5.27 10.1	4.22 8.13	3.44 6.66	2.94 5.74	2.29 4.50	1.89 3.74	1.60 2.01

VdS
MH29410
CE
EMC 1188-C
IEC
IEC 60896
IEC 62321
Qualitas Veritas
ISO 9001:2015

Ultracell (UK) Ltd | Vesty Business Park, Vesty Road, Liverpool, L30 1NY, United Kingdom
Tel: +44 (0) 151 523 2777 | Fax: +44 (0) 151 523 0855 | Email: info@ultracell.co.uk
www.ultracell.co.uk

UCG-V3-REV1 07/23
ALL DATA IS SUBJECT TO CHANGE WITHOUT NOTICE

Discharge Characteristics

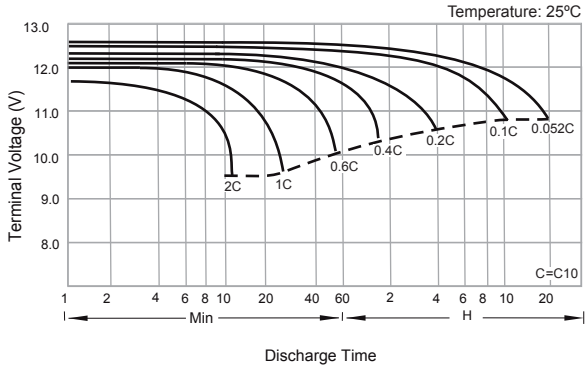

Float Charging Characteristics

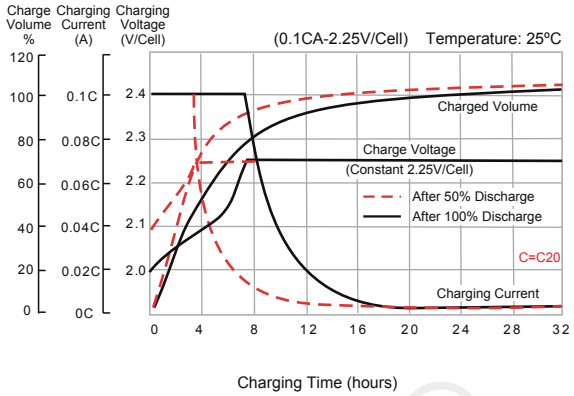

Temperature Effects in Relation to Battery Capacity

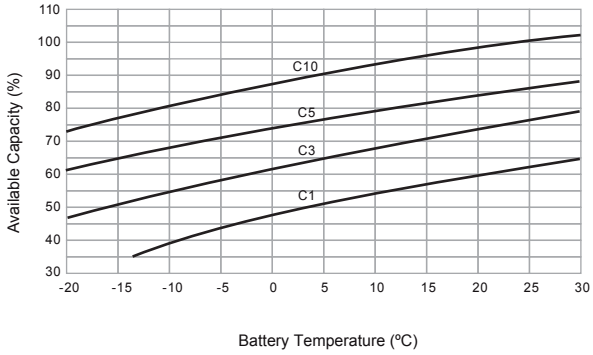

Effect of Temperature on Long Term Float Life

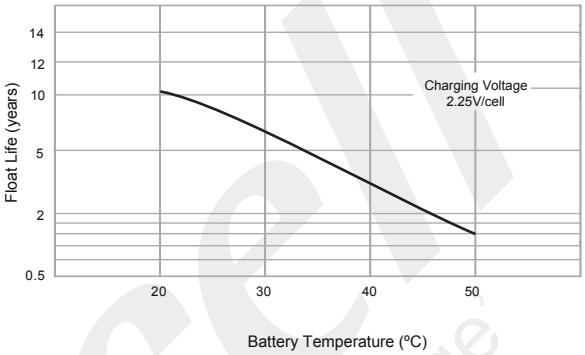

Cycle Life in Relation to Depth of Discharge

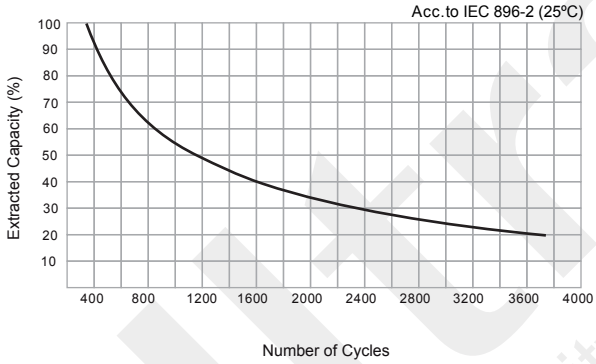

General Relation of Capacity vs. Storage Time

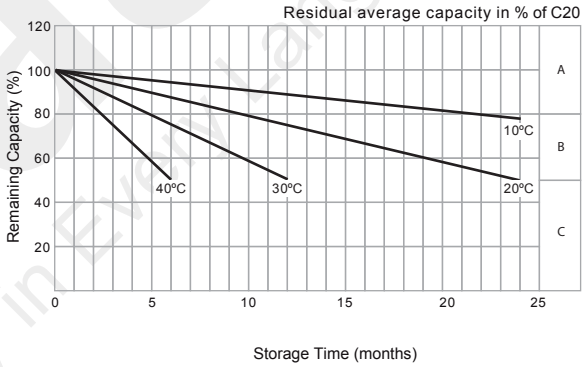

General Relation of Capacity vs. Storage Time (Notes)

A) No supplementary charge required.
(Carryout supplementary charge before use if 100% capacity is required.)

B) Supplementary charge required before use. Optional charging way as below:
1. Charged for above 3 days at limited current 0.25CA and constant voltage 2.25V/cell.
2. Charged for above 20 hours at limited current 0.25CA and constant voltage 2.45Vcell.
3. Charged for 8 ~ 10 hours at limited current 0.05 CA.

C) Supplementary charge may often fail to recover the capacity.
The battery should never be left standing till this is reached.

VdS
MH29410
CE
EMC 1188-C
IEC
IEC 60896
IEC 62321
Qualitas Veritas
ISO 9001:2015

Ultracell (UK) Ltd | Vesty Business Park, Vesty Road, Liverpool, L30 1NY, United Kingdom
Tel: +44 (0) 151 523 2777 | Fax: +44 (0) 151 523 0855 | Email: info@ultracell.co.uk
www.ultracell.co.uk

UCG-V3-REV1 07/23
ALL DATA IS SUBJECT TO CHANGE WITHOUT NOTICE